ANGELO PO - GRIGLIA CERAMICA GAS, 800 mm
1D0GRG - 28-10-2014 »

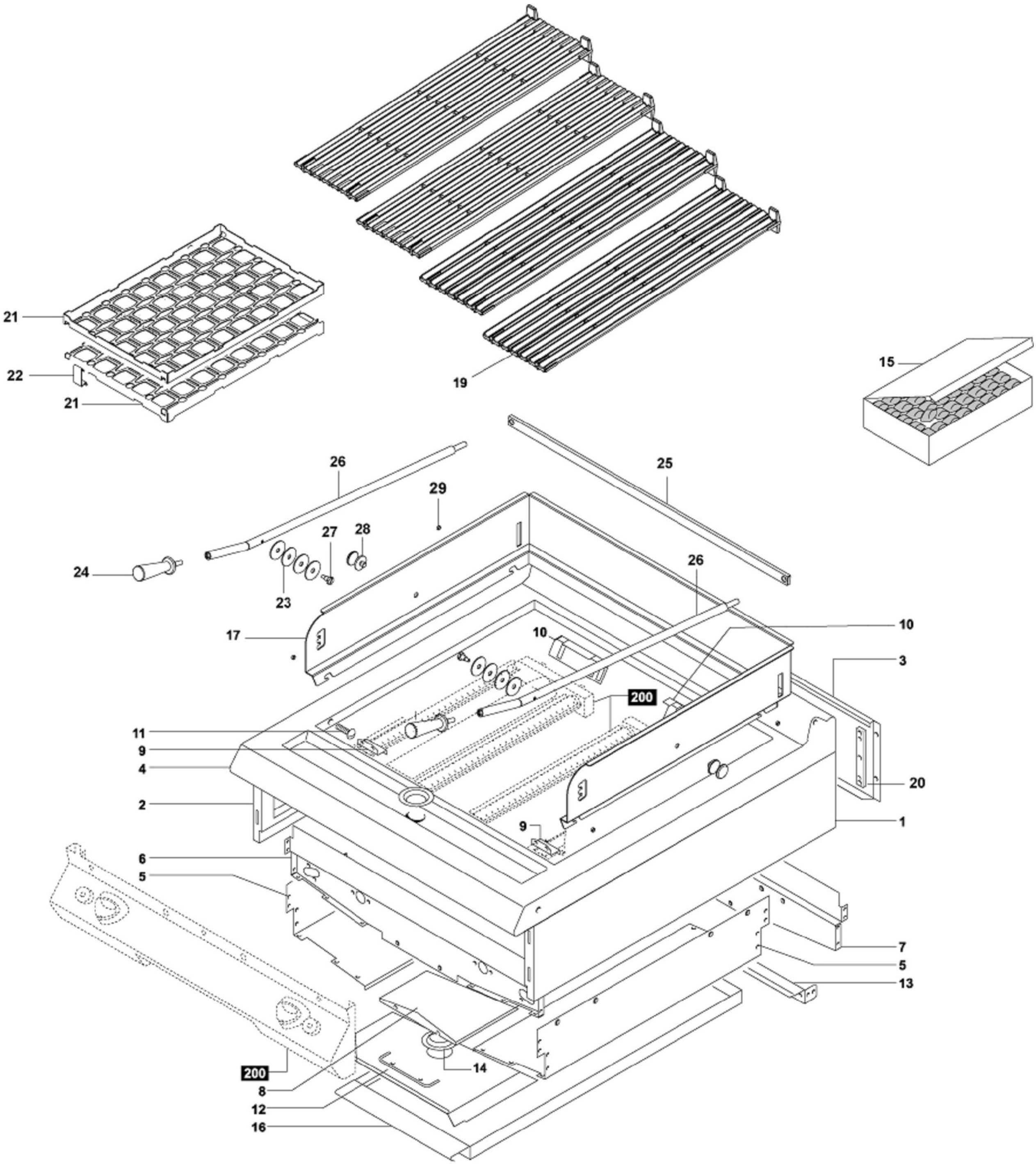

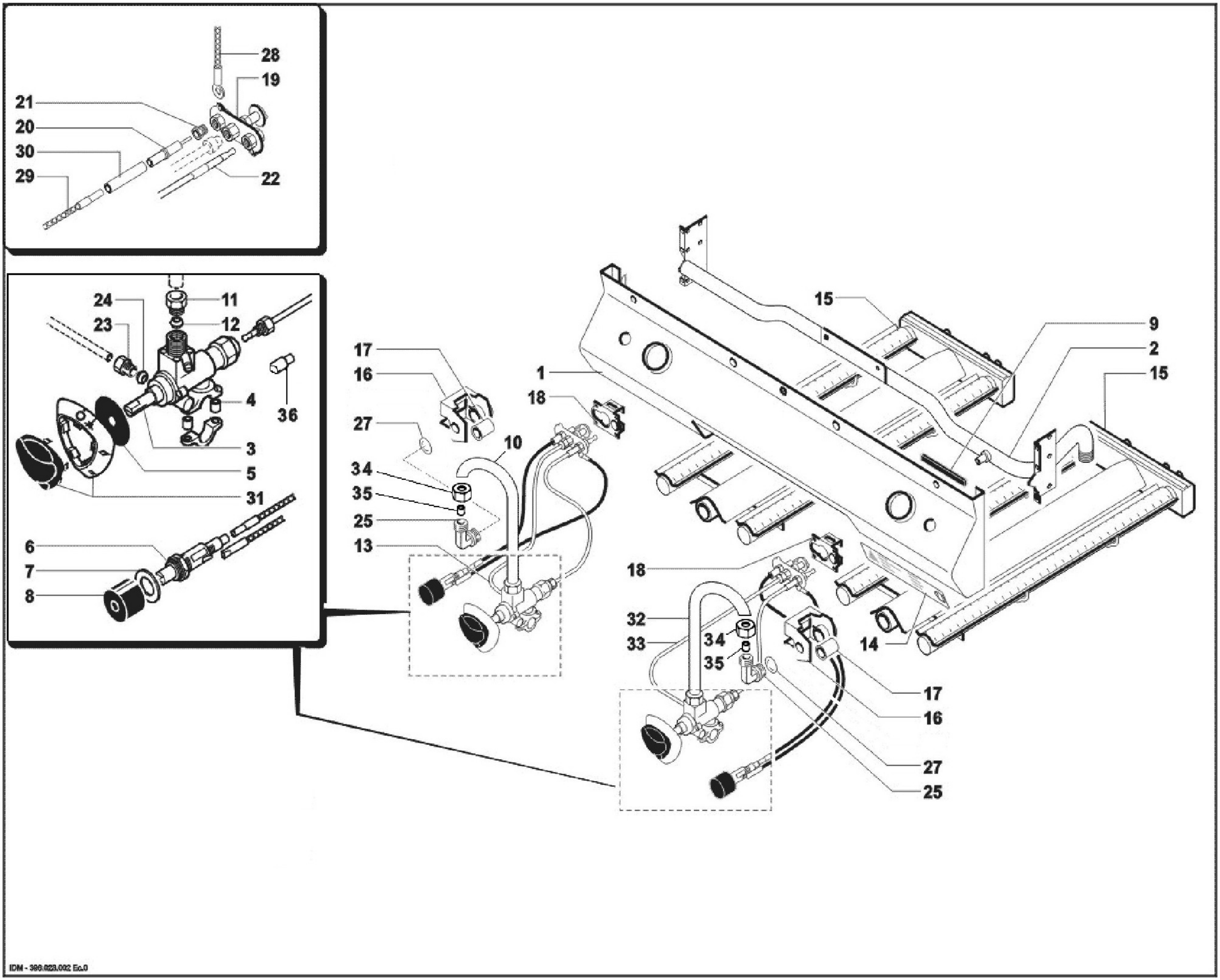
28
19
21
20
30
29
22
24
11
23
12
4
36
3
5
31
6
7
8
17
16
27
34
35
25
13
1
18
10
15
9
2
15
18
32
33
34
35
14
17
16
27
25
IDM - 386.023.002 Ec.0